X-FORCE
by DJPOWER

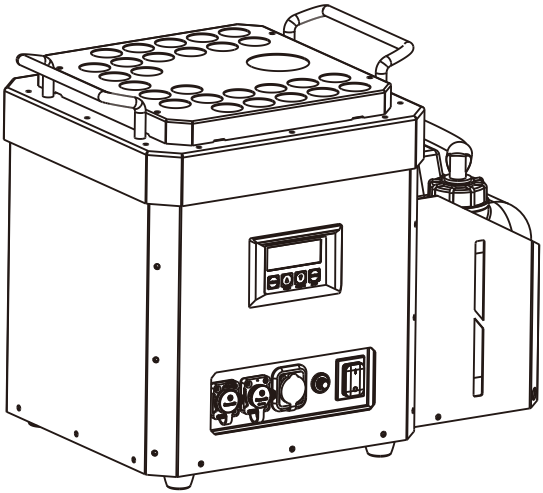

X-IP2VST STORM SUPER JET

USER MANUAL

GUANGZHOU DJPOWER ELECTRONIC TECHNOLOGY CO.,LTD

1 BEFORE YOU BEGIN

1.1 What Is Included

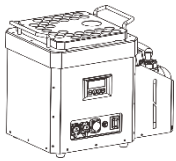

X-IP2VST × 1

Power Cord × 1

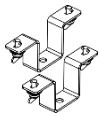

Omega bracket × 2

Warranty Card × 1

1.2 Unpacking Instructions

Carefully unpack the product immediately and check the container to make sure all the parts are in the package and are in good condition.

If the box or the contents (the product and included accessories) appear damaged from shipping, or show signs of mishandling, notify the carrier or dealer/seller immediately. In addition, keep the box and contents for inspection.

1.3 Symbols

Symbol	Meaning
⚠	***Caution*** Critical installation, configuration, or operation information. Not following these instructions may make the product not work, cause damage to the product, or cause harm to the operator.
ⓘ	***Important*** Important installation or configuration information. Failure to comply with this information may keep the product from working correctly.
💬	***Information*** Useful information.

1.4 Disclaimer

The information and specifications contained in this User Manual are subject to change without notice. DJPOWER assumes no responsibility or liability for any errors or omissions and reserves the right to revise or to create this manual at any time.

Copyright © 2025 DJPOWER. All rights reserved

1.5 Safety Notes

Please read the following Safety Notes carefully before working with the product. The notes include important safety information about installation, usage, and maintenance.

1.5.1 Personal Safety

- Always connect the product to a grounded circuit to avoid the risk of electrocution.
- The housing and nozzle of the machine get hot during operation. Do not touch these parts during or directly after operation. Wait until the machine has cooled down.
- Ensure that children, unauthorised people and animals do not obtain access to the machine.
- Avoid direct eye exposure to the light source while the product is on.

1.5.2 Mounting and Rigging

- This machine is designed for outdoor use and has an IPX3 waterproof rating. Do not immerse the machine in water.
- CAUTION: When transferring product from extreme temperature environments, (e.g. cold truck to warm humid ballroom) condensation may form on the internal electronics of the product. To avoid causing a failure, allow product to fully acclimate to the surrounding environment before connecting it to power. Ensure there are no flammable materials around the machine during operation.
- Do not mount the product on a flammable surface (linoleum, carpet, wood, paper, carton, plastic, etc.).
- Do not use in a confined space. Always install the product in a location with adequate ventilation, at least 20 in (50 cm) from adjacent surfaces.
- When hanging this product, always secure to a fastening device using a safety cable.
- Ensure that no ventilation slots on the product's housing are blocked or clogged by dust. If necessary, remove the dust.

1.5.3 Power and Wiring

- Ensure that the voltage of the outlet to which you are connecting the product is within the range stated on the decal or rear panel of the product.
- Ensure the power cord is not crimped or damaged.
- Never connect this product to a dimmer pack or rheostat.
- Never disconnect the product from power cord by pulling or tugging on the cord.
- To eliminate unnecessary wear and improve its lifespan, during periods of non-use completely disconnect the product from power via breaker or by unplugging it.

1.5.4 Operation

- Do not operate this product if you see damage to the housing or cables. Have the damaged
- parts replaced by an authorized technician at once.
- Do not use the product as a space heater.
- Please ensure there are no flammable materials around the machine during operation.
- The maximum ambient temperature (Ta) is 104 °F (40 °C). Do not operate the product at higher temperatures.
- **Do not cover the ventilation slots when operating to avoid internal overheating.**
- **Do not cover or plug the output nozzle during operation.**
- Wipe up spitted fluid immediately. Moisture, also fluid can destroy the electric.
- You may hear a loud popping sound during operation. This is normal.
- Never carry the product by the power cord or any moving part. Use the handles of the machine.
- **Drain the tank before transporting the product.**
- Disconnect the product from the power source before cleaning.
- In the event of a serious operating problem, stop using the product immediately.
- This product contains no user-serviceable parts. Any reference to servicing in this User Manual will only apply to properly trained, certified technicians. Do not open the housing or attempt any repairs which can lead to damage or malfunction.
- **Use only DJPOWER Consumable, fog fluid PRO-V is recommended.**

Keep this User Manual for future use. If you sell the product, be sure that the purchaser receives this document.

2 INTRODUCTION

2.1 Description

X-IP2VST is a newly launched Rainproof Dual Output LED Super-Jet Vertical Fog Machine by DJPOWER. It has the unique "Super-Jet" Technology (Patent No: ZL201520934500.2), “Immediate-Stop” (Patent No: ZL201320700998.7). IPX3 rainproof and dual nozzles design, the output speed and strength can even be comparable with CO2 jet. 27 pieces 8W LED lights produce colorful air columns, and the visual effect is very shocking! The machine is compact, powerful in function, and can be equipped with multi-angle nozzles to achieve the effect of multiple air columns. It is perfect for large clubs, large-scale events, rental companies and production release conference.

2.2 Features

- IPX3 rainproof design

- Dual output for strong air columns;
- 27pcs 8W LEDs, brighter colors;
- Patent "Super-Jet", the speed of fog output reaction is doubled;
- “Immediate-stop” patent technology, fog reaction freely.
- Optional multi-angle nozzles to achieve the effect of multiple air columns.

Use only DJPOWER professional fog fluid PRO-V, otherwise the machine will spray water or block! PRO-V can help create white thick smoke which completely dissipate in a few seconds. It is very suitable for fog jet effect, and this liquid is specially prepared, with very good light transmission, and the colored smoke column will be brighter.

2.3 Product Overview

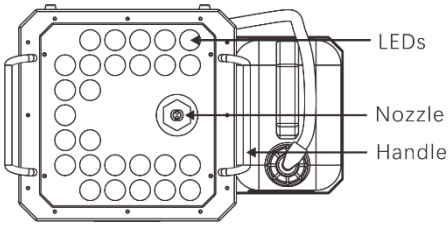

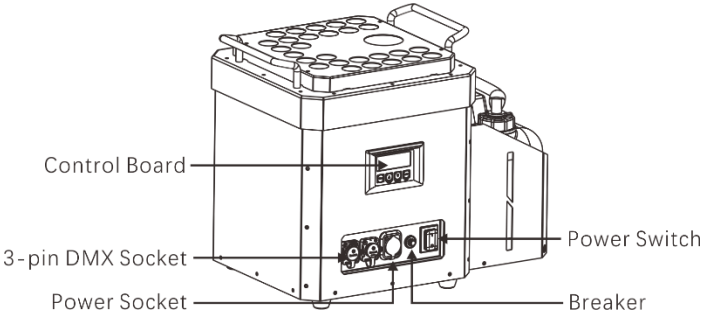

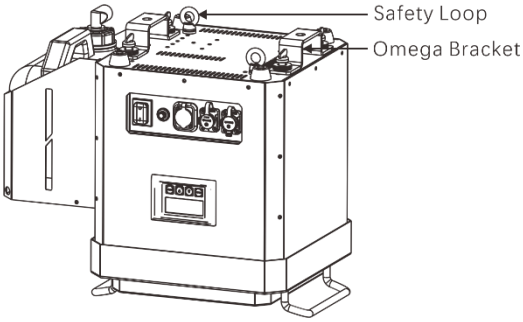

2.4 Product Dimensions

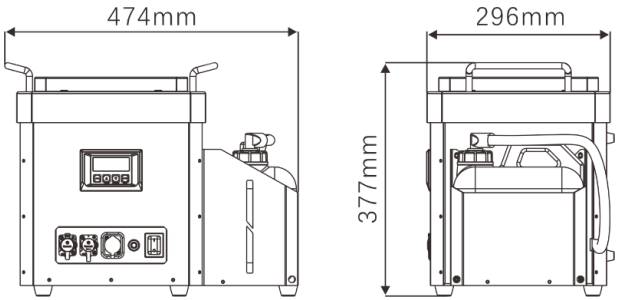

3 TECHNICAL SPECIFICATIONS

AC Power	**Input Voltage & Rate**	AC 100-120 V, 50/60 Hz	AC 220-240 V, 50/60 Hz
	Current Limiter Specifications	16A, 250 V	16 A, 250 V
	Total Power Consumption	1700W	3000 W
Heating	Heat Up Time	Appr. 9 min	
Light Source	LED Color	RGBA	
	Power per LED	8 W	
	Quantity of Inner LED	27 pcs	
Capacity	Fluid Tank Capacity	5 L	
	Output Duration with Fluid Tank Full	Appr. 10.0 min	
Output	Adjustable Output	×	
	Max Output Volume	Appr. 70,000 cuft/min	
	Max Output Height	Appr. 12 m	
	Fluid Consumption (100% Output)	Appr. 2 min/L	
	Maximum Continuous Duration (100% Output)	Appr. 10 S	
	Continuous Output	×	
Placement	Horizontal	√	
	Inclined	√ (Do not exceed the maximum level line.)	

& Mounting	Sideways (Do not cover the heat dissipation holes)	√
	Hang Upside Down	√
	Rigging & Trussing	√
Control	On-device Manual Control	Touch LCD control board
	Wireless Control	×
	Wired Control	×
	Control Protocol	DMX512
	DMX Channel Range	9 or 10
Consumable	**Consumable**	PRO-V
Weight & Dimensions	Net Weight	23.6 kg
	Gross Weight	26.6 kg
	Machine Dimensions	474 × 296 × 377 mm
	Packing Dimensions	560 × 385 × 460 mm

4 SETUP

4.1 AC Power

The machine has a fixed voltage power supply and can work with an input voltage of AC 100 V-120 V, 50/60 Hz or AC 220 V-240 V, 50/60 Hz, depending on the specific model. To determine the product's power requirements (circuit breaker, power outlet, and wiring), use the current value listed on the label affixed to the product's back panel, or refer to the product's specifications chart. The listed current rating indicates the product's average current draw under normal conditions.

Always connect the product to a protected circuit (circuit breaker or fuse). Ensure the product has an appropriate electrical ground to avoid the risk of electrocution or fire.

Never connect the product to a rheostat (variable resistor) or dimmer circuit, even if the rheostat or dimmer channel serves only as a 0 to 100% switch.

4.2 AC Plug

The X-IP2VST comes with a power input cord terminated with a Lockable Powercon connector on one end and an EU plug on the other end. If the power input cord that came with your product has no plug, or if you need to change the plug, use the table below to wire the new plug:

Connection	Wire (US)	Wire (EU)	Wire (CN)
AC Live	Black	Brown	Brown

AC Neutral	White	Blue	Blue
AC Ground	Green	Yellow	Yellow-green

4.3 Resetting the Breaker

This product is equipped with a resettable breaker. If the breaker trips, all sections of this product will lose power.

- Remove the power cord from mains power.
- Allow machine to cool for 15 minutes.
- After 15 minutes, you may attempt to reset the breaker by pressing the button.
- Plug the product's power cord into the power outlet and continue using as recommended.

4.4 DMX Linking

You can link the X-IP2VST to a DMX controller using a 3 pin DMX connection. If using other DMX-compatible products with this product, you can control each individually with a single DMX controller. Instructions for connecting and configuring this product for DMX operation are in the User Manual.

4.5 Mounting

Before mounting the product, read and follow the safety recommendations indicated in the Safety Notes.

4.5.1 Orientation

Always mount this product in a safe position and ensure there is adequate room for ventilation, configuration, and maintenance. The X-IP2VST should be suspended upright or upside down using the 2 Omega brackets included, or it can be placed on its rubber feet on a flat level surface.

4.5.1.1 Upside down installation

The guardrail of the fluid tank can be removed by loosening 5 screws, and then flipped 180° to put it back, so that the product can be used upside down.

(Note: When the machine is hung upside down, the attached ring screws must be installed and connected with a safety rope. When hung the machine, the handle of the tank must also be hung with a safety rope.

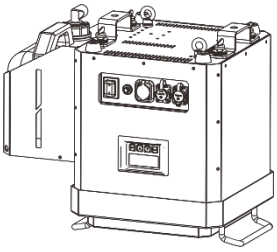

4.5.1.2 Tank Inversion

To avoid leaking, invert the fluid tank before hanging the machine upside down.

- Put the fluid tank back, install the fast lock and safety ring for suspension, and the product can be used upside down.

4.5.2 Rigging

DJPOWER recommends using the following general guidelines when mounting this product：

- When selecting the installation location, ensure there is easy access to the product for maintenance and control operations.
- Ensure that the product mounting structure or surface can support the product's weight (see the Technical Specifications).
- When mounting the product on the floor, ensure that the product and cables are away from people and vehicles.
- When mounting the product overhead, please use a safety cable. Mount the product securely to a rigging point on the elevated platform or a truss.

5 OPERATION

5.1 Preparing for Operation

To prepare the X-IP2VST for operation, perform the following steps：

- After checking that all the parts are intact and complete, position the machine on a flat surface.
- Withdraw the fluid tank from its compartment and remove its cap.
- Ensure that the plastic hoses attached to the cap are in place and in good condition.
- Pour DJPOWER PRO-V fog fluid into the tank (Do NOT exceed the max fluid level line) and replace the cap.
- Return the tank back to its compartment in the X-IP2VST.
- Ensure the plastic hose entering the X-IP2VST from the fluid tank cap is not bent or kinked.
- Always connect the product to a grounded circuit. Before power on, ensure it is connected with the rated voltage.
- Turn on the machine, and "Heating Up" shows on the display during the heating-up process. After appr. 9 minutes, the display changes to "Ready to Fog" when the machine is ready to output.

5.2 On-device Control Panel

To access the control panel functions, use the four buttons located underneath the LCD display.

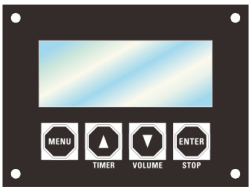

Button	Function
<MENU>	Switch menu pages to select a functi
▲ <TIMER>	Increases the numeric value of current function Triggers Timer output mode
▼ <VOLUME>	Decreases the numeric value of current function Triggers Manual output mode.
< ENTER > STOP	Save settings Output/Stop

5.3 On-device Control Mode & Operation

5.3.1 Operation Guidance

- Refer to the "MENU Map" for menu options, including the display interface and selectable values.
- To go to the desired main level, press <MENU> repeatedly until the option shows on the display. This will take you to the first programming level for that option.
- To select an option or value within the current programming level, press ▲ or ▼ until the option shows on the display. If there is another programming level, you will see that first option, or you will see the selected value.
- Press <MENU> repeatedly to switch menu page.
- Press <ENTER> to go back to Standby Page.

5.3.2 Manual Output Color

Manual Output	Color
0	LED Off
1	Red
2	Green
3	Blue
4	Amber
5	Purple
6	Yellow
7	Sky-Blue
8	Mix color
9	Auto color

5.3.3 Menu Map

	Display	Description	Parameter Range
Welcome Page	DJPOWER Software version	Software version	
	Initializing… X-IP2VST	Initializing	

Preparing Page	Heating Up >>>>>>	The machine is heating up	
Standby Page	Ready to work X-IP2VST	Finished heating up, ready to work.	
Settings Page	Timer Interval 115S	Press "▲" or "▼" to set interval output of TIMER mode	1-600
	Timer Duration 6S	Press "▲" or "▼" to set duration output of TIMER mode	1-10
	Manual Output 0	Press "▲" or "▼" to set output color	0-9
	Fluid Sensor ON	Press ▲ and ▼ to open the fluid sensor; When it's on, the machine will display an error if no fluid.	ON/OFF
	DMX Address 1	Press "▲" or "▼" to select DMX starting address	1-512
	DMX Address 9/10 Channel	Press "▲" or "▼" to select DMX channel model. 9-channel and 10-channel options are available.	9/10
	Language English	Press "▲" or "▼" to select language, and saved it by press ENTER	Chinese or English
Working Page	Interval 10s X-IP2VST	Interval output of TIMER mode	
	Duration 10s X-IP2VST	Duration output of TIMER mode	
	Volume X-IP2VST	Output of VOLUME mode	

Warning	Heating error	Heating error
Page	Lack of Fluid Please refill	Lack of fluid, and the display will flicker

5.4 DMX Mode & Operation DMX

The X-IP2VST can be operated using a DMX controller.

- Connect the product to a suitable power outlet.
- Turn the product on.
- Connect a DMX cable from the DMX output of the DMX controller to the DMX input socket on the product.

5.4.1 Starting Address

When selecting a starting DMX address, consider the number of DMX channels. If you choose a starting address that is too high, you could be restricted the access to some of the product's channels.

The starting address of the DJPOWER® X-IP2VST can be set in the range of DMX values from 001 to 512. It uses 9 or 10 DMX channels. If you need to control all channels, it is recommended to configure the highest starting address to 503.

When a DMX signal is connected, the menu will automatically jump to the "DMX Address" page. Or you can press "MENU" to enter "DMX Address" page to set the DMX channels.

5.4.2 DMX Mode Menu Map

When the machine connects to DMX, the display will always show DMX starting address, and you can set or change it at any time.

DMX 512 Address 1

5.4.3 DMX Channel Assignments and Values

- **9 DMX Channel**

Channel	Function	Value	Description
1	Fog	000 - 009	Fog off
		010 - 255	Fog on

2	Red	000 - 009	OFF
		010 - 255	Dim to bright
3	Green	000 - 009	OFF
		010 - 255	Dim to bright
4	Blue	000 - 009	OFF
		010 - 255	Dim to bright
5	Amber	000 - 009	OFF
		010 - 255	Dim to bright
6	Mix Color	000 - 009	OFF
		010 - 255	Mix color
7	Auto Color Changing Speed	000 - 009	OFF
		010 - 255	Slow to fast
8	Strobe	000 - 009	OFF
		010 - 255	Slow to fast
9	Dimmer	000 - 009	OFF
		010 - 255	Dim to bright

- **10 DMX Channel**

Channel	Function	Value	Description
1	Fog	000 - 009	Fog off
		010 - 255	Fog on
2	Red	000 - 009	OFF
		010 - 255	Dim to bright
3	Green	000 - 009	OFF
		010 - 255	Dim to bright
4	Blue	000 - 009	OFF
		010 - 255	Dim to bright
5	Amber	000 - 009	OFF
		010 - 255	Dim to bright
6	Auto Mix Color	000 - 009	OFF

		010 - 255	Auto mix color
7	Auto Color Changing Speed	000 - 009	OFF
		010 - 255	Slow to fast
8	Strobe	000 - 009	OFF
		010 - 255	Slow to fast
9	Dimmer	000 - 009	OFF
		010 - 255	Dim to bright
10	Safety Master Control	000-049	OFF
		050-200	ON （After the safety master control is activated, the functions of channels 1-9 can be controlled normally.）
		201-255	OFF

6 TECHNICAL INFORMATION

6.1 Expected LED Lifespan

LEDs gradually decline in brightness over time, primarily due to heat. Packaged in clusters, LEDs exhibit higher operating temperatures than in ideal, single-LED conditions. For this reason, using clustered LEDs at their fullest intensity significantly reduces the LEDs' lifespan. Under normal conditions, this lifespan can be 40,000 to 50,000 hours. If extending this lifespan is vital, lower the operating temperature by improving the ventilation around the product and reducing the ambient temperature to an optimal operating range. In addition, limiting the overall projection intensity may also help to extend the LEDs' lifespan.

6.2 Maintenance

Do not allow the X-IP2VST to become clogged. Dust build-up reduces light output performance and can cause overheating. This can lead to reduced light source life and increased mechanical wear. After every 40 hours of continuous operation, use a detergent composed of 35% vinegar and 65% distilled water through the system and spray 10-15 times after heat to prevent the accumulation of particulate matter in the heating element.

The recommended cleaning procedure is as follows：

1) Unplug the product from power.
2) Empty all fluid from the machine.

3) Add cleaning solution to the tank.

4) Connect the product to power and allow it to warm up.

5) Run the product in a well-ventilated area until the tank is empty. Do not allow the pump to run dry.

6) Refill with fog fluid to continue using the X-IP2VST. Run the machine briefly to clear any cleaning solution from the pump and heater.

7) Excessive dust, fluid residue and dirt will degrade performance and cause overheating. Remove dust from air vents with air compressor, vacuum or soft brush. The casing could be cleaned by the damp cloth.

Test-run your DJPOWER® X-IP2VST on a monthly basis to achieve the best performance.

6.3 Machine Storage

Before storing the machine, clean it as described in the cleaning procedure above; However, only follow steps 1 through 5. Do not refill the tank with fog fluid if storing the machine. Cleaning the system prior to storage will help prevent any particles from condensing inside the pump or heater while not in use.

WWW.DJPOWERFX.COM