TOPCAT®
by DJPOWER

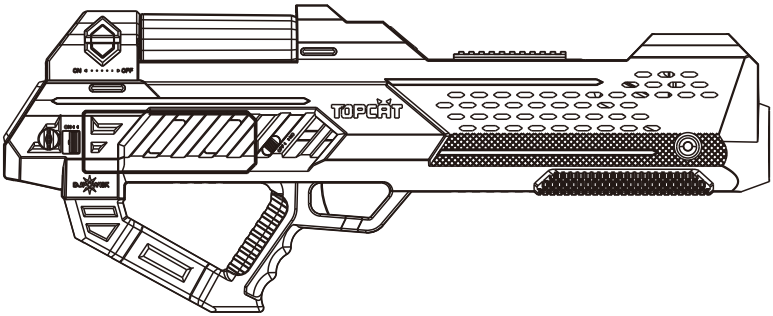

A-1S THANOS FOG BLASTER

USER MANUAL

GUANGZHOU DJPOWER ELECTRONIC TECHNOLOGY CO.,LTD

1 BEFORE YOU BEGIN

1.1 What Is Included

A-1S Fog Blaster× 1	Bottom Base× 1	Charger× 1	Fluid Bottle× 2
Strap× 1	Certificate× 1	Warranty Card× 1	

1.2 Unpacking Instructions

Carefully unpack the product immediately and check all the contents to make sure all the parts are complete and in good condition. If the packaging and any parts appear damaged or missing during transportation, please contact the carrier or dealer immediately and return the product in the original packaging.

1.3 Symbols

Symbol	Meaning
⚠	***Caution*** Critical information about installation, configuration, or operation. Not following these instructions may make the product not work, cause damage to the product, or cause harm to the operator.
ⓘ	***Important*** Important information about installation or configuration. Failure to comply with this information may keep the product from working correctly.
💬	***Information*** Useful information.

1.4 Disclaimer

The information and specifications contained in this User Manual are subject to change without notice. DJPOWER assumes no responsibility or liability for any errors or omissions and reserves the right to revise or to create this manual at any time.

Copyright © 2025 DJPOWER. All rights reserved

1.5 Safety Notes

Please read the following Safety Notes carefully before working with the product. The notes include important safety information about installation, usage, and maintenance.

1.5.1 Personal Safety

- Always connect the product to a grounded circuit to avoid the risk of electric shock.
- The machine is for adults only, and keep children out of reach of the machine!

1.5.2 Mounting and Rigging

- This machine can be used both indoors and outdoors. It is not rainproof. Please keep the machine dry and do not expose it to rain or humid environments.
- When the product is moved from an extreme environment (e.g., from cold and dry to warm and humid), the resulting condensation may cause a risk of electric shock. To avoid such failures, make sure that the machine is acclimatized to the surrounding environment before connecting the power supply. Make sure there are no flammable items around the machine during operation.
- Always install the product in a well-ventilated location.
- Be sure that no ventilation slots on the product's housing are blocked. If blocked, please clean them promptly.

1.5.3 Power and Wiring

- Before connecting the power supply, please carefully check whether the power supply voltage is consistent with the rated voltage of the machine.
- Make sure the power cord is not crimped or damaged.
- Never connect this product to a dimmer pack or rheostat
- Never disconnect the product from power cord by pulling or tugging on the cord.
- To eliminate unnecessary wear and improve its lifespan, during periods of non-use, please completely disconnect the product from power via breaker or by unplugging it.

1.5.4 Operation

- Do not operate this product if the machine housing or cables are found to be damaged. Have the damaged parts replaced by an authorized technician at once.
- Do not use the product as a space heater.
- Please ensure that there are no flammable items around the machine during operation.
- The maximum ambient temperature is 40 °C. Do not operate the machine in a high temperature environment.
- Do not cover the ventilation slots when operating to avoid internal overheating.
- Do not cover or plug the output nozzle during operation.
- Never carry the product by the power cord or any moving part.
- Always disconnect the product from the power source before cleaning.
- In the event of a serious operating problem, stop using the product immediately.
- This machine does not contain any parts that can be disassembled, repaired or modified by the user. Untrained and authorized technicians are not allowed to attempt to repair or modify this machine by themselves to avoid damage or malfunction.

Keep this User Manual for future use. If you sell the product, be sure that the purchaser receives this document.

2 INTRODUCTION

2.1 Description

Traditional entertainment venues use CO2 blasters to create fog effects, but these require bulky steel cylinders to be carried on the back, which is inconvenient and poses safety risks. A can of carbon dioxide will run out of gas soon, and it needs to be transported to a professional gas factory to be refilled with carbon dioxide, which is very inconvenient and costly.

Our innovative product, the A-1S Fog Blaster, uses eco-friendly stage fog fluid as its raw material to generate smoke effects. It is user-friendly, cost-effective, and rechargeable. During performances, it operates without external pipes or power cables.

Unlike traditional fog machines that spray slowly with limited range, the A-1S integrates a high-speed airflow drive device, enabling rapid and long-distance fog projection.

A-1S can spray strong wind without fog, allowing performers to spray strong wind toward the audience's hair, enhancing interactive entertainment.

2.2 Features

- Designed with high-speed fan to help enhance fog output strength;
- Continuous full burst up to 30s;
- Specially designed bullet-shape fluid bottle, easy to replace or refill;
- Coated with special insulation layer to avoid overheat;
- Rechargeable battery design, cyclic charging, saves time and effort;
- Quick-change function for the rechargeable battery.

2.3 Product Overview

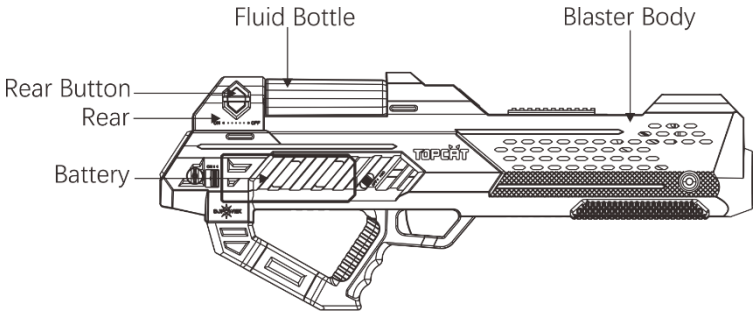

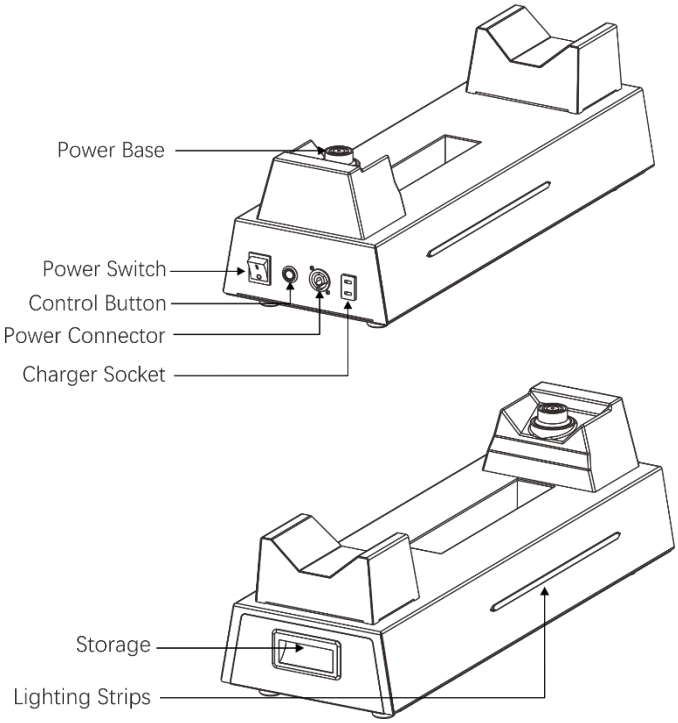

2.4 Product Dimensions

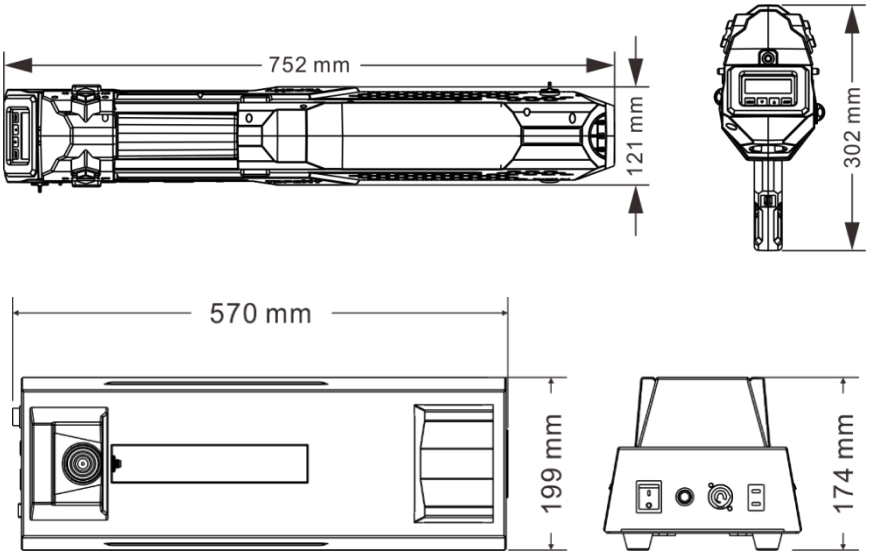

3 TECHNICAL SPECIFICATIONS

AC Power	Input Voltage & Rate	AC 100-120 V, 50/60 Hz	AC 220-240 V, 50/60 Hz
	Current Limiter Type	Breaker	Breaker
	Current Limiter Specifications	10A, 250V	6A, 250V
	Total Power Consumption	1,000 W	1,200 W
Heating	Heat Up Time	Appr. 7 min	
Light Source	LED Color	Nozzle LED：RGB	Blaster Body LED： RGBW
	LED Type	Nozzle LED：Three in one Blaster Body LED：Four in one	
	Power per LED	Nozzle LED：9 W	Blaster Body LED：0.5W
	Total LED Power	Nozzle LED：36 W	Blaster Body LED：33 W
Capacity	Fluid Bottle Capacity	330 ml	
Output	Adjustable Output	×	
	Fluid Consumption Rate	Appr. 20 min/L	
	Max Fog Output Volume	Appr. 18,000 cuft/min	
	Max Output Distance	Appr. 8m	
	Max Continuous Duration (100% Output)	Appr. 30 s	
Placement & Mounting	Horizontal	√	
	Inclined	×	
	Sidelong (Do not cover the heat dissipation holes)	×	
	Hang Upside Down	×	
	Rigging & Trussing	√	
Control	On-device Manual Control	LCD	
	Wireless Control	×	
	Wired Control	×	
	DMX512	×	
Consumable	Consumable	PRO-Q	
Weight & Dimensions	Net Weight	13.8 kg	
	Gross Weight	19.8 kg	
	Blaster Body Dimension	752 × 302 × 121 mm	
	Bottom Base Dimension	570 × 199 × 174 mm	
	Carton Dimension	910 × 710 × 295 mm	
	Flight case Dimension	830 × 620 ×250 mm	

4 SETUP

4.1 AC Power

The machine has a fixed voltage power supply and can work with an input voltage of AC 100V-120V, 50/60Hz or AC 220V-240V, 50/60Hz.

To determine the product's power requirements (circuit breaker, power outlet, and wiring), use the current value listed on the label affixed to the product's back panel, or refer to the product's specifications chart. The listed current rating indicates the product's average current draw under normal conditions.

Always connect the product to a protected circuit (circuit breaker or fuse). Make sure the product has an appropriate electrical ground to avoid the risk of electrocution or fire.

Never connect the product to a rheostat (variable resistor) or dimmer circuit, even if the rheostat or dimmer channel serves only as a 0 to 100% switch.

4.2 OPERATION

Before using the product, read and follow the safety recommendations indicated in the Safety Notes.

4.2.1 Step 1: Fluid Bottle Installation

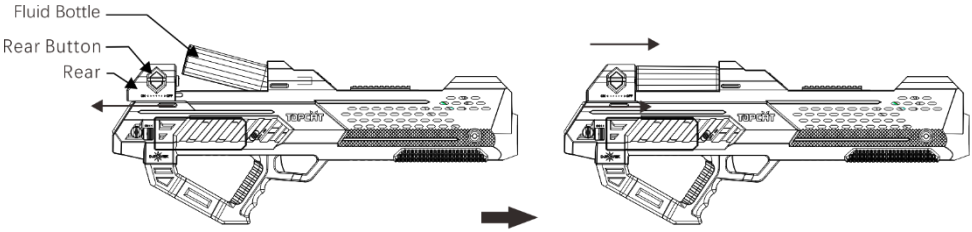

Fluid bottle installation diagram 1 Fluid bottle installation diagram 2

- The fluid bottle is installed as shown in Figure 2. As shown in Figure 1, hold the left and right Rear Buttons, slide the Rear backward. Tilt the fluid bottle and install it into the groove. As shown in Figure 2, after installation, push the Rear forward and fix the fluid bottle.

After a new fluid bottle is installed on the machine, the output may occasionally decrease. This may be because the fluid bottle is installed at an incorrect angle, resulting in poor sealing. This can be solved by rotating the fluid bottle or reinstalling it.

When the fluid bottle is low on fluid, there may be a risk of fluid splashing out of the nozzle. Please keep a safe distance of 2 meters and replace the fluid bottle with a full one in time.

4.2.2 Step 2: Battery Installation and Charging Operation Guide

1. Install the battery into the battery compartment

The machine uses 8×18650 batteries. Open the battery compartment as illustrated. Observe the positive and negative markings (typically "+" and "-" symbols) in the slots. Insert the eight 18650 batteries one by one, aligning the positive terminals (flat ends) of the batteries with the "+" marks in the slots. Press the batteries until you hear a click, ensuring that the spring contacts are securely fastened. Confirm there is no loose battery or abnormal noise, then close the battery compartment.

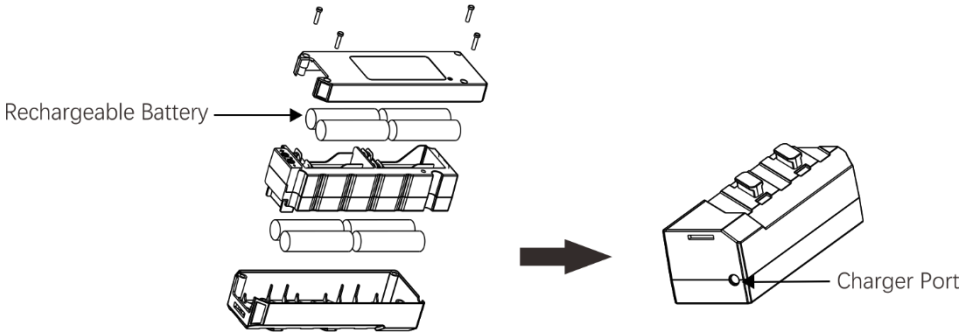

Safety Tips

Only protected 18650 lithium batteries are permitted (single-cell capacity ≥ 2500mAh, discharge rate ≥10C, capacity/brand/condition (new or used) must be consistent).

Prohibited Operations

- Do not mix batteries of different specifications
- Do not install the battery in reverse, short circuit or use damaged batteries (leakage/swelling/deformation)
- Do not use non-matching chargers

2. Connect the charger to charge

Connect the charger output plug to the battery compartment charging port, and the other end can be connected to the base charger socket for charging.

Observe the charger indicator light:

Solid red light: Charging (normal operation)

Flashing red light: Poor contact or battery abnormality

Solid green light: Charging complete (disconnect power)

First-time charging recommendations:

Continuously monitor for 30 minutes to ensure the battery compartment/charger does not overheat (>50° C), emit unusual odors, or produce abnormal sounds.

Estimated charging time: 5~8 hours. Disconnect the power immediately and unplug the charger once the green light turns on to avoid overcharging.

Precautions:

- Charge the device in a well-ventilated environment with suitable temperature, away from high temperature, humidity, and flammable and explosive items.
- Check the battery regularly to see if it is swollen, leaking or damaged. If found, please replace it in time.
- For long-term storage, please remove the battery and store it in a dry, cool place.
- It is recommended to use an insulated battery box for transportation and storage to prevent metal objects from contacting the electrodes.
- This operation must be performed by adults. Keep away from children and pets.

4.2.3 Step 3: How to Install and Remove the Battery

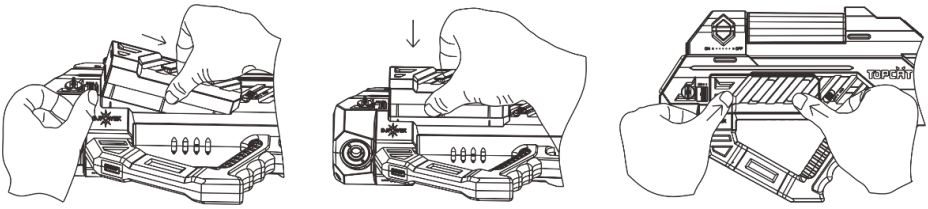

- Tilt the battery to one side to release the right lock, then insert it into the slot while using your left hand to open the left lock.
- Once both side locks are released by the battery edges, align it vertically and push downward.
- Press the battery straight down until both left and right locks securely click into place.

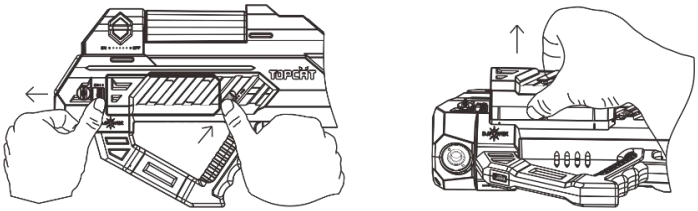

- Push the left and right locks of the battery compartment open at the same time, and the battery will pop out automatically.
- Lift the battery straight up and remove it.

1. **Do not store the battery on an unused machine for a long time**
2. **Do not disassemble or incinerate the battery.**
3. **For environmental protection, properly dispose of used batteries.**

4.2.4 Step 4: Place the fog blaster on the power base, ensure it is correctly engaged. Power on the bottom base to heat the fog blaster.

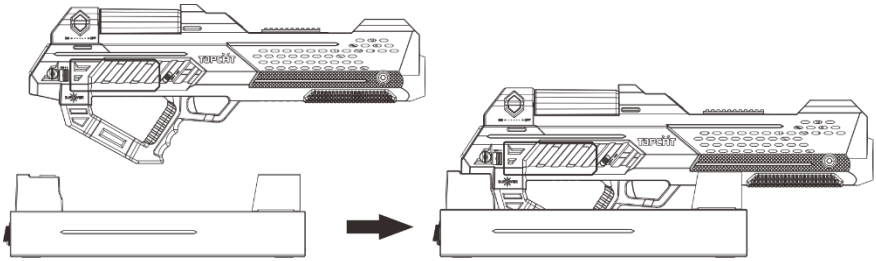

- During heating, the LCD display shows " Heating up", the LED inside two Trigger Buttons flicker. If the fog blaster is removed from the power base or the power supply of the power base is turned off, the LCD display will show "Heating is not completed". After heating is completed, the blue LED lights on the left and right Trigger Buttons will be on, indicating that heating is completed and can be used. The LCD display will show the smoke spraying time.
- When the fog blaster is placed on the power base and heated for 1 minute, the LED light strip on the will turn off, the LCD display screen will also go dark, and the machine will enter low power saving mode. When any button on the display panel or trigger is pressed or the fog blaster is picked up, the LCD display screen and LED light strip will light up again.

Introduction to Power Base:

Plug the power cable into a power outlet and connect the other end to the power supply. Turn on the power switch of the power base. The left and right LED light strips on the base will gradually change color, indicating the heating base is now powered. Place the A-1S fog Blaster on the power base, the unit starts heating. After the power base is powered on for 3 hours, heating protection shall be activated. LED strips on the base shows RED and keeps flickering, meanwhile the Heating Protection Switch shows blue and LED flickers, indicating that the base is powered off. If you need to power on the base again, just manually press the Heating Protection Switch.

4.2.5 Usage Step<1>: Single Button Smoke Mode

In single-button mode, after the heat storage is completed, press the trigger on the blaster body to spray smoke and blow air.

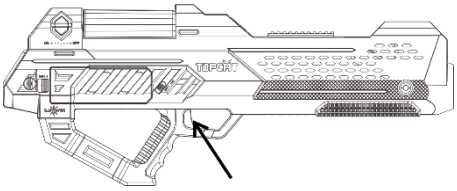

4.2.6 Usage step <2>: Dual-button Smoke Mode

In dual-button mode, after heat storage is completed, press trigger on the blaster body and the blue buttons on both sides of the blaster head to spray smoke and blow air.

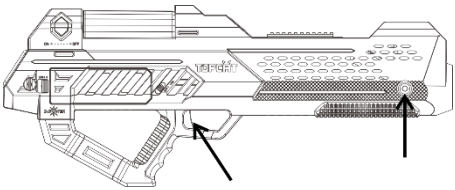

In dual-button mode, after heat storage is completed, press the trigger on the blaster body to only blow air.

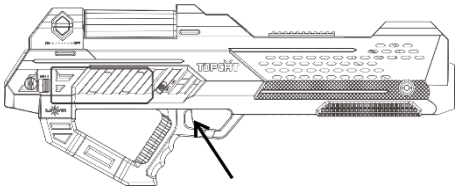

4.3 On-device Control Mode & Operation

4.3.1 On-device Control

This LCD display is available in Chinese and English for easy operation.

To access the control panel functions, use the four buttons located underneath the LCD display.

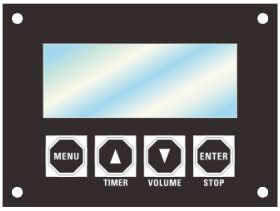

Button	Function
<MENU>	Switch menu pages to select a function
<▲>	Increase
<▼>	Decrease
<ENTER>	Confirm/Exit ("STOP" key)

- Refer to the menu page to understand the menu options, including the operating interface displayed and the values that can be selected.
- You can repeatedly press the <MENU> key to the page you want to set until the setting page of the parameter appears. The value that appears on this page is the first value of the parameter.
- Press ▲ or ▼ to set or select a parameter value on the current page. If the parameter range is exceeded, you will see the first parameter or the set value.
- Press the <MENU> key repeatedly to switch between different menu pages.
- Press <ENTER> at any time can switch between the current menu page and the standby page.

4.3.2 Menu Map

Display	Description	Parameter Range

Welcome Pages	TOPCAT A-1S		
Preparing Pages	Heating up Battery: 100%	The units is heating up. Indicating the battery power.	
Standby Page	Fog Output 30S Battery: 100%	Heating is finished. Fog output duration is 30s Indicating the battery power.	
	Place the Blaster Body on the Power Base. If the temperature has not reached the required operating level, the LCD display will show "Heating Up." Once the temperature reaches the required level, it will display "Fog Output 30," indicating that the device is ready to work.		
Setting Pages	Strong Wind ON	Press "▲" or "▼" to switch on/off the fan installed in the muzzle.	ON/OFF
	Fog Color: Auto	Press "▲" or "▼" to set the LED color installed around the nozzle	OFF 1=RED 2=GREEN 3=BLUE 4=YELLOW 5=PURPLE 6=SKY BLUE 7=AUTO COLOR
	When the machine finishes heating and starts working, the fog output will be accompanied by the preset LED colors.		
	Blaster Body Color Auto	Press "▲" or "▼" to set the LED color installed in the Blaster body.	1=RED 2=GREEN 3=BLUE 4=PURPLE 5=YELLOW 6=SKY BLUE 7=WHITE AUTO COLOR
Status pages	Trigger 1	Press "▲" or "▼" to set the Trigger functions 1 means: Hold the Trigger only to spray fog. 2 means: Hold the Trigger and two Trigger Buttons by the sides of the nozzle together to spray fog. In such case, if holding the Trigger	1 or 2

	only, the high-speed fan in the nozzle can work.

5 TECHNICAL INFORMATION

5.1 Machine Cleaning and Maintenance

1. Please use DJPOWER original consumables to extend the service life of the machine. Do not allow non-professionals to disassemble the machine, and it is strictly forbidden to modify it to avoid danger.

2. Excessive dust on the machine, liquid residue accumulation of dirty, will reduce the performance of the machine, and lead to poor heat dissipation. Use an air compressor, vacuum cleaner or soft brush to remove dust from the machine. The case can be wiped with a wet cloth.

Test and run your DJPOWER ® A-1S every month to achieve optimal performance.

5.2 Storage

5.2.1 Machine Storage

Before storing the machine, please empty the fluid bottle after cleaning and maintaining the machine and keep the storage environment dry.

5.2.2 Troubleshooting

Errors	Fault Description	Potential Cause	Solution
No fluid	Refer to “MENU MAP” chapter to for more information	No fluid in the tank	Refill the fluid
		Pump problem	Contact dealer for Service
Heating failure	Refer to “MENU MAP” chapter to for more information	Heater problem	Contact dealer for Service

WWW.DJPOWERFX.COM